Engineered Valves

EnviZion® & BioviZion®

Hygienic Diaphragm Valves



ITT

ENGINEERED FOR LIFE

EnviZion Valve

Experience the Future with EnviZion

The Biopharm industry relies on hygienic diaphragm valves for demanding process applications due to their unique balance of clean-ability, drain-ability and pressure/temperature capability. For more than 40 years the technology of these valves has changed very little. Advances in performance have been nominal as the basic design concept has remained the same: body, diaphragm, topworks, and four fasteners. This design requires experienced personnel and stringent maintenance practices to assure consistent, reliable valve performance. All while the industry is forced to increase productivity, extend preventative maintenance intervals, and reduce operating costs.

ITT's breakthrough technology, the EnviZion valve, sets a new standard for the future of hygienic diaphragm valves. The EnviZion valve is designed specifically to help customers install, operate, and maintain their valves more efficiently. This unique design provides a significant reduction in total cost of ownership while supporting the industries' goals to increase productivity, improve reliability and enhance clean-ability.

QUICK CHANGE BONNET



TOOL-LESS ASSEMBLY



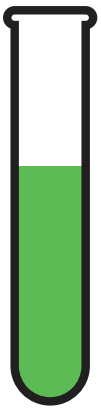

CONTAMINATION FREE

CERTIFIED EHEDG EUROPEAN HYGIENIC ENGINEERING & DESIGN GROUP TYPE EL CLASS I NOVEMBER 2018

SEALING SYSTEM 3RD PARTY CERTIFIED



LEAK FREE SEAL INTEGRITY



FASTENER FREE

ACTIVE 360° SEAL

ZERO RETORQUES

EnviZion Valve

Valve maintenance as easy as 1-2-3



1. Unscrew Cover CCW



2. Rotate Bonnet



3. Lift Bonnet off Studs

The EnviZion valve utilizes a breakthrough mount and turn design that allows for quick and easy valve disassembly.

- Tool-less maintenance - no tools required for valve installation and diaphragm replacement, simplifying the maintenance process.
- Fasteners eliminated - no more handling loose parts or accessing fasteners in tight spaces.
- Save time - diaphragm changes reduced from an industry average of 23 minutes to 3 minutes, resulting in a 90% reduction in maintenance time.



Reliable Sealing and Improved Cleanability with No Re-Torques

The EnviZion valve eliminates the effects of thermal cycling with an integrated thermal compensation system.

- Active sealing technology - the constant force of the thermal compensation system provides a reliable seal that does not degrade over time (unlike other diaphragm valve designs that use passive sealing technology).
- No retorquing - the seal is maintained over varying operating conditions, eliminating the need to adjust fasteners after thermal cycling.

The EnviZion valve improves clean-ability by reducing the potential for fluid entrapment.

- Diaphragm seal - the valve body and diaphragm create a seal on the leading edge of the D-section, preventing fluid from getting into areas which would be difficult to clean and possibly lead to process contamination.

Net result - reduced maintenance hours, commissioning costs and potential for system contamination.

EnviZion Valve

Total Cost of Ownership

The EnviZion valve platform was developed with one overarching goal – to reduce the customer's total cost of ownership (TCO). Costs associated with installation, validation, operation, and maintenance are significantly reduced with the EnviZion valve.

- Over 90% annual maintenance cost savings is achieved by reducing the time required to change diaphragms.
- No retorquing after thermal cycling reduces start up time and maintenance cost.
- EHEDG certified sealing system reliably eliminates the potential for contamination.
- Preventative maintenance intervals can be extended, saving time and cost.
- Production capacity is optimized and unscheduled downtime and investigation costs are minimized.



CERTIFICATE OF COMPLIANCE

EHEDG

Date of issue: 30 November 2018

Valid until end: December 2019

EL Class I

EHEDG hereby declares that the product

Diaphragm Valve - EnviZion series, models 0.75R, 1.00, 1.50, and 2.00 with modified PTFE diaphragms

from

ITT Engineered Valves LLC, 33 Centerville Road , 17603 Lancaster, United States

has/have been evaluated for compliance and meets/meet the current criteria for Hygienic Equipment Design of the EHEDG

Certificate No. EHEDG-C1800076

Signed _____ President EHEDG
Ludvig Joesefsberg

Signed _____ EHEDG Certification Officer
Mirjam Steenaard

EHEDG Secretariat
Lyoner Straße 18
60528 Frankfurt am Main
Germany

©EHEDG

EnviZion valve has been evaluated for compliance and meets the current criteria for Hygienic Equipment Design of the EHEDG.

EnviZion Valve Value Proposition

QUICK CHANGE BONNET	ACTIVE 360° SEAL		User Benefit	User Value
✓		✓	Reduced installation time	$$
	✓		Eliminates re-torque time (CIP, SIP)	$$
	✓		Efficient system pressure checks / reduced investigation time	$$$
	✓		Increased production capacity (less downtime)	$$$$
	✓		Reduced product loss (no contamination)	$$$$
	✓		Reduced unscheduled down time	$$$
	✓		Reduction of Investigation time / cost	$$$
✓		✓	Reduced diaphragm change time (10x)	$$$
✓			Operators vs maintenance for diaphragm changes	$$
		✓	Eliminates fastener replacements / galling issues	$

Installation **Operation** **Maintenance**

Technology delivers significant value and cost benefits

Valve Bodies

Forged (2-Way)



Size: 0.25-2inch (DN6-50)
End Connections: Tri-Clamp®, 16 O.D. Gauge Tubing, DIN 11850
Material: Tri-certified 316L stainless steel, sulfur controlled per ASME BPE (ASTM A182 grade 316L, S9, EN 10222-5 EN 1.4435, BN2)
Dimensional Standards: USOD Tubing, DIN
Patented

Wrought (Block Bodies)



Size: 0.5-2 inch (DN15-50)
End Connections: Tri-Clamp®, 16 O.D. Gauge Tubing, Schedule piping (5, 10, 40), ISO, DIN 11850
ISO 2852, DIN 32676, BS 4825 Part 3 compliant ends (EHEDG)
Material: 316L stainless steel ASTM A479, A240, 316L
Special Alloys[1]: C22, C276, AL6XN
Dimensional Standards: USOD Tubing, Pipe, ISO/DIN

1 Other materials available upon request
Patented

Surface Finishes

10 – 25 Ra* (.25μm - 0.6 μm)
Interior & exterior electropolish available
*25 Ra standard polish

Topworks

Standard Features (All Bonnets)

Bonnet Material:
- Stainless steel
- Handwheel/Bonnet Cover: FDA 21CFR177.1660 compliant PES

Standard Features:
- Autoclavable
- Thermal compensation system
- Visual position indication
- Weep hole

Corrosion Resistance: Resistant to common industry washdowns. Consult factory for specific chemical resistance.

Actuated Advantage® Bonnet



Type: ZB1, ZB2, ZB3, ZB1S (sealed), ZB2S (sealed), ZB3S (sealed)
Size: 1-2 inch (DN25-50)
Operating Modes: Fail Closed, Fail Open, Double Acting
Actuator Material: Glass reinforced polyethersulfone (PES)
Standard Features:
- Safety lock-pin
- 360 degree air port rotation
- 60# and 90# spring packages (Fail Closed)

BioviZion Manual Bonnet



Type: BV ZH,ZHS
Size: 0.25, 0.375, 0.5
Safety Lock Screw (sealed)
Travel stop

BioviZion Actuated Bonnet



Type: BV ZA,ZAS
Size: 0.25, 0.375, 0.5
Operating modes: Fail Closed, Fail Open, Double Acting
Standard Features:
- Safety lock-pin
- 360 degree air port rotation
- 60# and 90# spring packages (Fail Closed)

Standard Manual Bonnet



Type: ZH, ZHS (sealed)
Size: .5-2 inch (DN15-50)
Standard Features:
- Safety lock-pin
- Travel stop

Patented

Actuated Stainless Steel Bonnet



Type: ZA1, ZA2, ZA3, ZA1S (sealed), ZA2S (sealed), ZA3S (sealed)
Size: .5-2 inch (DN15-50)
Operating Modes: Fail Closed, Fail Open, Double Acting
Actuator Material: Stainless steel
Standard Features:
- Safety lock-pin
- 0.5 inch: 360 degree air port rotation

Patented

Accessories

EnviZion Bonnet Guard (EBG) Tamper Resistant / Submersible Option:



- Modified Plunger design maintains "drop in" feature for assembly
- Plunger cover seals & isolates plunger
  - Tool required to remove
- Autoclave capable stainless steel cover with small hex socket
- Umbrella vent seal to avoid pressurization if diaphragm fails
- Sealed hand wheel screw

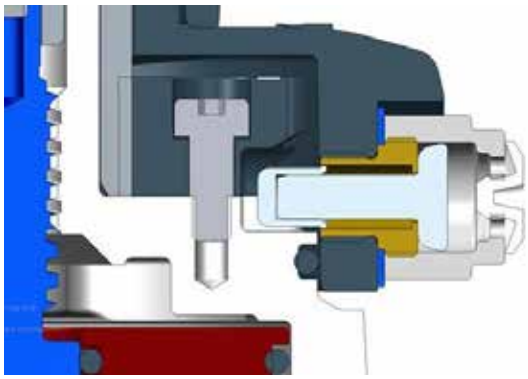

Adjustable Opening Stop (AOS)

External adjustment of valve flow rate.
Spindle screw slot

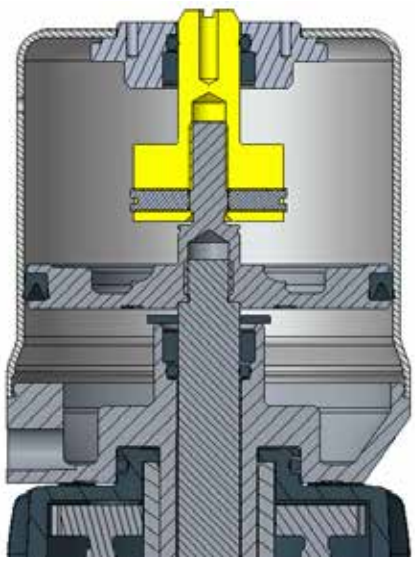

EnviZion Valve Diaphragms

Diaphragms

The EnviZion diaphragm has been developed to withstand the wear of today's production cycles and maintains a reliable seal, avoiding the risk of leakage and batch contamination. It combines advanced technology with proven materials that are used extensively in the Pharmaceutical and Biopharm industries.

Featuring a robust 2-piece construction, the EnviZion diaphragm utilizes the same modified PTFE material as the Pure-Flo series of valves with an enhanced EPDM backing cushion. The diaphragm design has been optimized to maximize sealing efficiency while minimizing stresses during operation.

Type: TMZ
Patented

Temperature Rating:
-20°C to 165°C (-4°F to 329°F)
-30°C to 140°C (-22°F to 285°F) for continuous steam
-30°C to 150°C (-22°F to 302°F) for intermittent steam

Material (2-Piece Construction):
Product Contact Surface: Modified PTFE
Backing Cushion: Grade B1 EPDM
Lot code traceable

Regulatory Compliance:
PTFE: 21CFR 177.1550 (a)
EPDM Backing cushion: 21 CFR 177.2600
USP Class VI, Chapter <87>, <88> (70°C and 121°C)
EMEA 410 compliant

PTFE Product Contact Surface



EPDM Backing Cushion



EnviZion Diaphragm Connection as easy as 1-2-3



1. Align diaphragm stud head with compressor slot



2. Push diaphragm stud into compressor slot



3. Rotate 90°

Actuator Sizing

Valve Size	BioviZion		0.5" (DN 15)		0.75" (DN 20)		0.75"R (DN 20)		1" (DN 25)		1.5" (DN 40)		2.0" (DN 50)	
ΔP	100%	0%	100%	0%	100%	0%	100%	0%	100%	0%	100%	0%	100%	0%
Actuator Model	Fail Closed - Reverse Acting - Spring to Close Maximum Line Pressure (psi/(bar))													
ZA2/ZA2S	150 (10.3)	150 (10.3)	150 (10.3)	135 (9.3)	150 (10.3)	70 (4.8)	150 (10.3)	135 (9.3)	150 (10.3)	70 (4.8)	150 (10.3)	90 (6.2)	130 (9.0)	65 (4.5)
ZA26/ZA26S (60#)	65 (4.5)	58 (4.0)	150 (10.3)	83 (5.7)			150 (10.3)	83 (5.7)						
ZB2/ZB2S					135 (9.3)	80 (5.5)			135 (9.3)	80 (5.5)	150 (10.3)	104 (7.2)	150 (10.3)	87 (6.0)
ZB26/ZB26S (60#)					30 (2.1)	30 (2.1)			30 (2.1)	30 (2.1)	52 (3.6)	52 (3.6)	57 (3.9)	30 (2.1)

Valve Size		BioviZion		0.5" (DN 15)		0.75" (DN 20)		0.75"R (DN 20)		1" (DN 25)		1.5" (DN 40)		2.0" (DN 50)	
ΔP		100%	0%	100%	0%	100%	0%	100%	0%	100%	0%	100%	0%	100%	0%
Actuator Model	Line Pressure	Fail Open - Direct Acting - Spring to Open Air pressure required to shut-off line pressure (psi/(bar))													
ZA1/ZA1S	20	67 (4.6)	67 (4.6)	45 (3.1)	45 (3.1)	45 (3.1)	45 (3.1)	45 (3.1)	45 (3.1)	45 (3.1)	45 (3.1)	32 (2.2)	35 (2.4)	42 (2.9)	50 (3.4)
ZA1/ZA1S	40	69 (4.8)	69 (4.7)	48 (3.3)	50 (3.4)	50 (3.4)	53 (3.7)	48 (3.3)	50 (3.4)	50 (3.4)	53 (3.7)	36 (2.5)	42 (2.9)	46 (3.2)	57 (3.9)
ZA1/ZA1S	60	72 (5.0)	72 (5.0)	51 (3.5)	54 (3.7)	54 (3.7)	62 (4.3)	51 (3.5)	54 (3.7)	54 (3.7)	62 (4.3)	40 (2.8)	49 (3.4)	50 (3.5)	64 (4.4)
ZA1/ZA1S	80	74 (5.1)	74 (5.1)	54 (3.7)	59 (4.1)	59 (4.1)	70 (4.8)	54 (3.7)	59 (4.1)	59 (4.1)	70 (4.8)	44 (3.0)	56 (3.9)	54 (3.8)	71 (4.9)
ZA1/ZA1S	100	76 (5.2)	77 (5.3)	57 (3.9)	63 (4.3)	63 (4.3)	79 (5.4)	57 (3.9)	63 (4.3)	63 (4.3)	79 (5.4)	47 (3.2)	63 (4.3)	59 (4.0)	78 (5.4)
ZA1/ZA1S	125	79 (5.4)	81 (5.6)	61 (4.2)	69 (4.8)	69 (4.8)	89 (6.1)	61 (4.2)	69 (4.8)	69 (4.8)	89 (6.1)	52 (3.6)	71 (4.9)	64 (4.4)	86 (5.9)
ZA1/ZA1S	150	82 (5.7)	84 (5.8)	65 (4.5)	75 (5.2)	75 (5.2)	100 (6.9)	65 (4.5)	75 (5.2)	75 (5.2)	100 (6.9)	57 (3.9)	80 (5.5)	69 (4.8)	95 (6.5)
ZB1/ZB1S	20					44 (3.0)	44 (3.0)			44 (3.0)	44 (3.0)	39 (2.7)	39 (2.7)	41 (2.8)	44 (3.0)
ZB1/ZB1S	40					47 (3.2)	48 (3.3)			47 (3.2)	48 (3.3)	42 (2.9)	44 (3.0)	48 (3.3)	52 (3.6)
ZB1/ZB1S	60					50 (3.4)	56 (3.9)			50 (3.4)	56 (3.9)	45 (3.1)	51 (3.5)	55 (3.8)	60 (4.2)
ZB1/ZB1S	80					53 (3.7)	64 (4.4)			53 (3.7)	64 (4.4)	49 (3.4)	58 (4.0)	62 (4.3)	68 (4.7)
ZB1/ZB1S	100					56 (3.9)	73 (5.0)			56 (3.9)	73 (5.0)	52 (3.6)	65 (4.5)	69 (4.8)	76 (5.3)
ZB1/ZB1S	125					59 (4.1)	83 (5.7)			59 (4.1)	83 (5.7)	56 (3.9)	74 (5.1)	77 (5.3)	86 (5.9)
ZB1/ZB1S	150					63 (4.3)				63 (4.3)		60 (4.1)	83 (5.7)	88 (6.1)	
Actuator Model	Line Pressure	Double Acting - Air to Open Air to Close Air pressure required to shut-off line pressure (psi/(bar))													
ZA3/ZA3S	20	43 (3.0)	43 (3.0)	30 (2.1)	17 (1.2)	30 (2.1)	30 (2.1)	30 (2.1)	30 (2.1)	30 (2.1)	30 (2.1)	17 (1.2)	18 (1.2)	27 (1.9)	27 (1.9)
ZA3/ZA3S	40	45 (3.1)	45 (3.1)	33 (2.3)	22 (1.5)	35 (2.4)	38 (2.6)	33 (2.3)	35 (2.4)	35 (2.4)	38 (2.6)	20 (1.4)	26 (1.8)	31 (2.1)	35 (2.4)
ZA3/ZA3S	60	48 (3.3)	48 (3.3)	36 (2.5)	27 (1.9)	39 (2.7)	47 (3.2)	36 (2.5)	39 (2.7)	39 (2.7)	47 (3.2)	23 (1.6)	35 (2.4)	34 (2.3)	44 (3.0)
ZA3/ZA3S	80	50 (3.4)	50 (3.4)	39 (2.7)	32(2.2)	44 (3.0)	55 (3.8)	39 (2.7)	44 (3.0)	44 (3.0)	55 (3.8)	27 (1.9)	43 (3.0)	38 (2.6)	52 (3.6)
ZA3/ZA3S	100	52 (3.6)	52 (3.6)	42 (2.9)	37(2.5)	48 (3.3)	64 (4.4)	42 (2.9)	48 (3.3)	48 (3.3)	64 (4.4)	30 (2.1)	51 (3.5)	41 (2.8)	61 (4.2)
ZA3/ZA3S	125	55 (3.8)	56 (3.9)	46 (3.2)	43(3.0)	54 (3.7)	74 (5.1)	46 (3.2)	54 (3.7)	54 (3.7)	74 (5.1)	34 (2.3)	62 (4.3)	46 (3.1)	72 (5.0)
ZA3/ZA3S	150	58 (4.0)	60 (4.1)	50 (3.4)	49 (3.4)	60 (4.1)	85 (5.9)	50 (3.4)	60 (4.1)	60 (4.1)	85 (5.9)	38 (2.6)	72 (5.0)	50 (3.4)	83 (5.7)
ZB3/ZB3S	20					34 (2.3)	39 (2.7)			34 (2.3)	39 (2.7)	26 (1.8)	26 (1.8)	30 (2.1)	30 (2.1)
ZB3/ZB3S	40					37 (2.6)	48 (3.3)			37 (2.6)	48 (3.3)	30 (2.1)	32 (2.2)	37 (2.6)	41 (2.9)
ZB3/ZB3S	60					40 (2.8)	57 (3.9)			40 (2.8)	57 (3.9)	34 (2.3)	40 (2.8)	44 (3.0)	52 (3.6)
ZB3/ZB3S	80					44 (3.0)	65 (4.5)			44 (3.0)	65 (4.5)	38 (2.6)	47 (3.2)	51 (3.5)	62 (4.3)
ZB3/ZB3S	100					47 (3.2)	75 (5.2)			47 (3.2)	75 (5.2)	41 (2.8)	55 (3.8)	58 (4.0)	73 (5.1)
ZB3/ZB3S	125					51 (3.5)	86 (5.9)			51 (3.5)	86 (5.9)	46 (3.1)	64 (4.4)	66 (4.6)	87 (6.0)
ZB3/ZB3S	150					55 (3.8)				55 (3.8)		51 (3.5)	73 (5.0)	75 (5.2)	

Note: Fail closed actuators require 90 psi (6 bar) instrument air to achieve full open with 0 psi/bar line pressure (except ZA26 and ZB26 which require 60 psi (4 bar) to open). The exposure of PTFE diaphragms to steam may reduce shutoff capabilities or increase air required to shut off by as much as 30%.

Cv/Kv Ratings for Manual and Actuated (SS)

Size (in)	BV 0.5" (DN15)		0.5" (DN 15)		0.75" (DN 20)		0.75"R (DN 20)		1" (DN 25)		1.5" (DN 40)		2" (DN 50)	
Cv/Kv	Cv	Kv	Cv	Kv	Cv	Kv	Cv	Kv	Cv	Kv	Cv	Kv	Cv	Kv
25% Open			1.4	1.21	3.9	3.37	1.4	1.22	4.4	3.81	6.3	5.45	9.1	7.88
50% Open			2.5	2.16	7.4	6.40	2.9	2.51	9.5	8.22	17.3	14.98	24.9	21.56
75% Open			2.9	2.51	9.6	8.30	3.8	3.29	12.4	10.73	29.4	25.45	42.7	36.97
100% Open	2.1	1.83	3	2.60	10	8.65	4.5	3.89	14	12.11	37.1	32.12	51.2	44.33

Cv/Kv Ratings for Advantage Actuator

Size (in)	0.75" (DN 20)		1" (DN 25)		1.5" (DN 40)		2" (DN 50)	
Cv/Kv	Cv	Kv	Cv	Kv	Cv	Kv	Cv	Kv
25% Open	3.9	3.37	4.4	3.81	6.3	5.45	8	7.15
50% Open	7.4	6.40	9.5	8.22	17.3	14.98	20	17.89
75% Open	9.6	8.30	12.4	10.73	29.4	25.45	35	31.31
100% Open	10	8.65	14	12.11	37.1	32.12	46	41.15

Cv units = GPM with 1 psi pressure drop across valve. Kv = m ^ 3/hr with 1 Kg/cm ^ 2 pressure drop across the valve

Pressure/Temperature Recommendations

Pressure/Temperature Recommendations

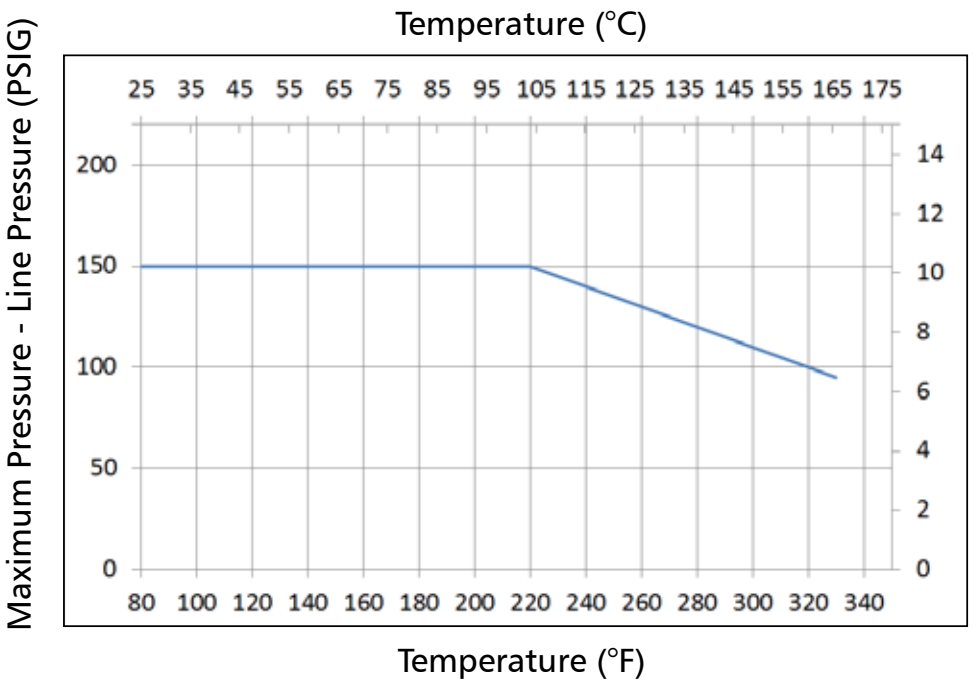

EnviZion Diaphragms for Vacuum Service

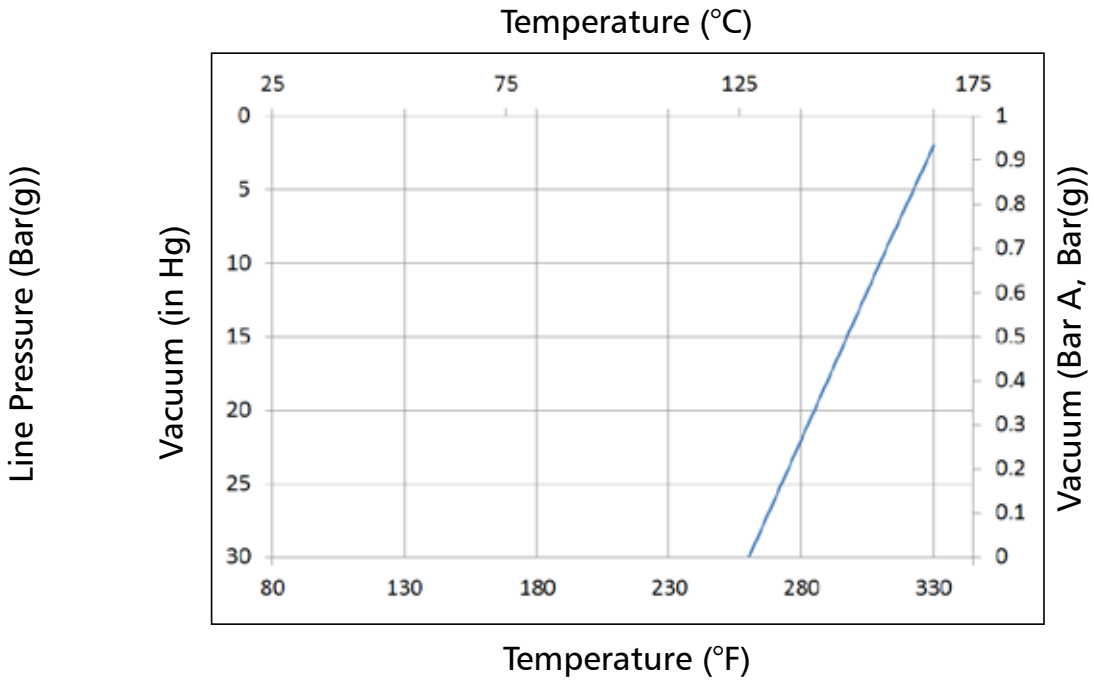

Weights and Dimensions

EnviZion and BioviZion Manual Bonnet

Valve Size		A		B		Bonnet Weight	
Inch	DN	Inch	mm	Inch	mm	Lbs	kg
BV 0.50	BV 15	1.45	36,8	3.51	89,2	0.7	0.28
0.50	15	2.05	52,1	4.04	102,5	1.3	0.6
0.75	20	2.95	74,9	5.30	134,6	3.5	1.6
0.75R	20	2.05	52,1	4.04	102.5	3.5	1.6
1.00	25	2.95	74,9	5.30	134,6	3.5	1.6
1.50	40	3.89	98,8	7.09	180,1	7.3	3.3
2.00	50	3.89	98,8	7.69	195,4	8.5	3.8

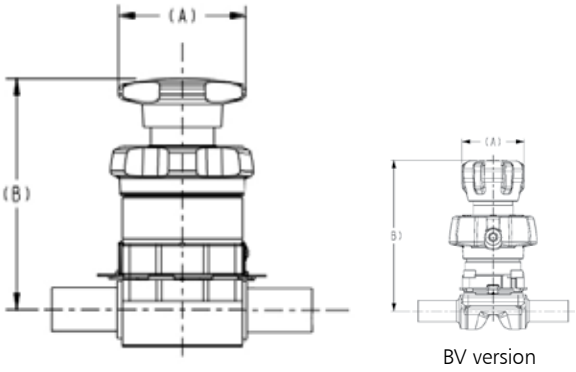

BV version

EnviZion and BioviZion Actuator (ZA Series)

Valve Size		A		B		C		Bonnet Weight	
Inch	DN	Inch	mm	Inch	mm	Inch	mm	Lbs	kg
BV 0.50	BV 15	2.00	50,8	5.54	140,7	5.21	132,3	1.9	0.85
0.50	15	2.62	66,5	6.56	166,7	6.04	153,4	3.1	1.4
0.75	20	3.12	79,4	8.22	208,7	7.51	190,7	6.2	2.8
0.75R	20	2.62	66,5	6.56	166.7	6.04	153.4	3.1	1.4
1.00	25	3.12	79,4	8.22	208,7	7.51	190,7	6.2	2.8
1.50	40	4.62	117,3	12.08	306,8	11.18	284,0	17.9	8.2
2.00	50	4.62	117,3	12.68	322,1	11.49	291,7	18.5	8.4

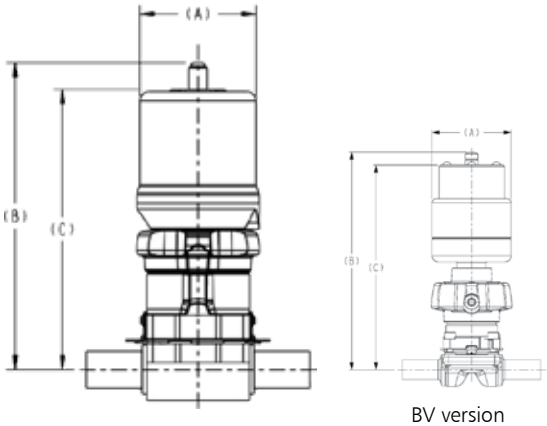

BV version

EnviZion Advantage Actuator (ZB Series)

Valve Size		D		E		F		G		Bonnet Weight	
Inch	DN	Inch	mm	Inch	mm	Inch	mm	Inch	mm	Lbs	kg
0.75	20	8.03	204	8.61	219	4.56	116	3.88	98	6.3	2.9
1.00	25	8.03	204	8.61	219	4.56	116	3.88	98	6.3	2.9
1.50	40	11.84	301	12.67	322	6.41	163	5.94	151	18.9	8.6
2.00	50	12.14	309	13.10	333	6.41	163	5.94	151	19.7	8.9

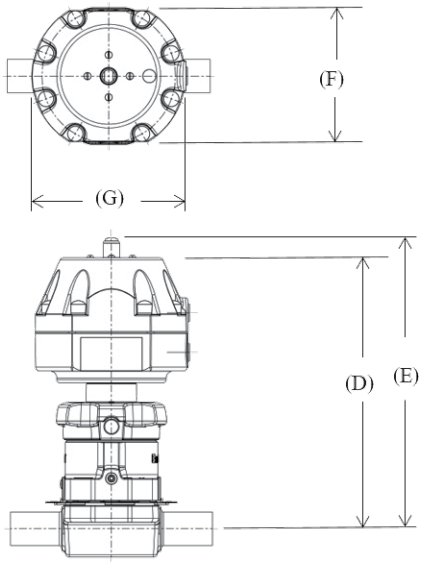

Body Dimensions

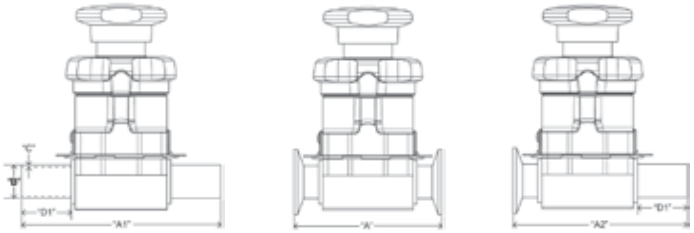

USOD (ANSI)							Drain Angles		
B		A	A1	D1	A2	C			
End Connection Size		Overall Length	Overall Length	Weld Tangent	Overall Length	Tube wall	ANSI	ISO	DIN
IN	DN	Tri Clamp	Extended BW	Extended BW	TC x BW	Extended BW			
Forgings									
BV 0.25"[1]	DN6	2.5" (64)	3.5" (89)	1" (25)	3.0" (76,2)	.035 (0,89)	34°	-	-
BV 0.375"[1]	DN10	2.5" (64)	3.5" (89)	1" (25)	3.0" (76,2)	.035 (0,89)	27°	-	-
BV 0.5"	DN15	2.5" (64)	3.5" (89)	1" (25)	3.0" (76,2)	.065 (1,65)	23°	-	-
0.5"	DN15	3.5" (89)	5.22"(133)	1.5" (38)	4.36 (111)	.065 (1,65)	27°	TBD	TBD
0.75"	DN20	4" (102)	6.00" (152)	1.5" (38)	5.00 (127)	.065 (1,65)	36°	TBD	TBD
0.75R	DN20	4" (102)	6.00" (152)	1.5" (38)	5.00 (127)	.065 (1,65)	16°	TBD	TBD
1"	DN25	4.5" (114)	6.00" (152)	1.5" (38)	5.25 (133)	.065 (1,65)	30°	TBD	TBD
1.5"	DN40	5.5 (140)	7.08 (180)	1.5 (38)	6.3 (160)	.065 (1,65)	25°	TBD	TBD
2"	DN50	6.25 (159)	7.42 (188)	1.5 (38)	6.84 (174)	.065 (1,65)	19°	TBD	TBD

Note:
- Drain angle tolerances of +/- 2° will assure optimal drainability
- Dimensions in ( ) are mm

[1]20 gauge standard

How to Specify an EnviZion Valve

EnviZion configuration numbers follow the same format as the Pure-Flo platform, with the exception of adding the ENV prefix in front of the figure number. In addition, codes have been established for manual bonnets, actuators, and diaphragms as noted below.

Platform

Code	Description
ENV	EnviZion

Body Type

Code	Description
F	Forged 316L SS
W	Wrought 316L SS
BV	**BioviZion 316L SS**

EnviZion Manual Bonnets

Code	Description
ZH	EnviZion Zero torque Manual
ZHS	EnviZion Zero torque Manual sealed

EnviZion Actuated Stainless Steel Bonnets

Code	Description
ZA1	EnviZion Zero torque Actuator - FO
ZA2	EnviZion Zero torque Actuator - FC (90#)
ZA3	EnviZion Zero torque Actuator – DA
ZA1S	EnviZion Zero torque Actuator - FO sealed
ZA2S	EnviZion Zero torque Actuator- FC (90#) sealed
ZA3S	EnviZion Zero torque Actuator – DA sealed

EnviZion Advantage Bonnets

Code	Description
ZB1	EnviZion Advantage Zero torque Actuator - FO
ZB2	EnviZion Advantage Zero torque Actuator - FC (90#)
ZB3	EnviZion Advantage Zero torque Actuator – DA
ZB1S	EnviZion Advantage Zero torque Actuator - FO sealed
ZB2S	EnviZion Advantage Zero torque Actuator- FC (90#) sealed
ZB3S	EnviZion Advantage Zero torque Actuator – DA sealed

Diaphragms

Code	Description
TMZ	EnviZion modified PTFE diaphragm (FDA)/B1 backing cushion

Topworks Options

Code	Description
AOS	Adjustable Opening Stop
EBG	EnviZion Bonnet Guard Tamper Resistant/Submersible

For more information on how to order an EnviZion valve, seeB.ENV-ORD.2017-11.

Valve Size

Code	Description
.25	.25 Inch (DN6)
.38	.38 Inch (DN10)
.50	.50 Inch (DN15)
.75	.75 Inch (DN20)
1	1 Inch (DN25)
1.5	1.5 Inch (DN40)
2	2 Inch (DN50)

Body Ends

Code	Description
Clamp	
419	Tri-Clamp Tube
419S	Tri-Clamp Tube 18 Gauge
419S1	Tri-Clamp Tube 20 Gauge
Buttweld	
423	18 Gauge
424	20 Gauge
428	16 Gauge
428L	16 Gauge Ext. Tangent BW

Surface Finish

Code	Description
Mechanical Polish - Interior	
6	25 µin Ra (.6 µm) max
7	15 µin Ra (.38 µm) max
8	20 µin Ra (.5 µm) max
10	10 µin Ra (.25 µm) max
SF1	BPE SF1 Ra 20 Max
SF2	BPE SF2 Ra 25 Max
SF4	BPE SF4 Ra 15 Max, EP
SF5	BPE SF5 Ra 20 Max, EP
SF6	BPE SF6 Ra 25 Max, EP

Surface Finish

Code	Description
Mechanical Polish - Exterior	
0	No Mechanical Polish
1	Scotch Brite
2	25 µin Ra (.6 µm) max, Welds Scotch Brite
3	35 µin Ra (.8 µm) max, Welds Scotch Brite
4	25 µin Ra (.6 µm) max, Welds Removed
6	35 µin Ra (.8 µm) max, Welds Removed
7	Special Polish Requirement
ElectroPolish	
0	No Electropolish
2	Exterior Only
3	Interior and Exterior
4	Interior Only

ITT

ENGINEERED FOR LIFE

For more information on how to order an EnviZion valve, see B.PFORD.en-US.2018-10.

Figure Number Example: ENV-1-F-428L-6-0-0-TMZ-ZH
Description: 1" EnviZion manual valve, forged body, 16 gauge buttweld ends, 25 Ra interior polish with PTFE diaphragm with EPDM backing cushion

ITT Engineered Valves
33 Centerville Road
Lancaster, PA 17603, USA
Tel: +1 (717) 509-2200

Cam-Line, Cam-Tite, Dia-Flo, EnviZion, Pure-Flo, Skotch

ITT Engineered Valves
1110 Bankhead Avenue
Amory, MS 38821, USA
Tel: +1 (662) 256-7185

Fabri-Valve

ITT Industries Ltd.
Weycroft Avenue,
Millwey Rise Industrial Estate
Axminster, EX13 5HU, United Kingdom
Tel: +44 1297-639100

EnviZion, Pure-Flo

© 2020 Engineered Valves, LLC