Mark 968 Series

Sanitary Gas Regulators sizes 3/4" - 2" for biopharm, pharma, food & beverage low pressure Clean Dry Gas/Air blanketing and inline pressure regulation

The Mark 968 Sanitary Gas Regulator is the ideal valve for low pressure gas regulation in pharmaceutical and food & beverage applications. The self-contained low pressure gas regulator is for use on tank blanketing and other very low critical pressure air and gas applications such as gas for motive force fluid movement, or Single Use disposable bag integrity testing or inflation.

The Mark 968 is normally open. Increases in the outlet pressure are sensed through the aspirator causing the large elastomer diaphragm to rise, which moves the plug toward the seat. As outlet pressure decreases, the diaphragm moves down and moves the plug away from the seat to increase flow. The lever, which connects the stem to the diaphragm, amplifies diaphragm forces for tighter shutoff (only available on sizes 3/4" and 1").

The large diaphragm and lever actuation allows the Mark 968 to act with higher sensitivity compared to smaller diaphragm pressure regulators. High sensitivity is important, as the Mark 968 often works with very low pressure (down to 1" w.c. or 2,5 mbar). This special actuation improves the accuracy and shutoff of the valve - two important benefits in this style of regulator. Together, the SST construction, FDA-approved seals and the tri-clamp connections make this valve well suited for sterile gas applications and environments.

Features

- Inlet pressures up to 150 psi (10 bar)
- Robust design — emergency outlet pressure may reach 100% of inlet pressure without damaging valve
- 360° body orientation — valve can be installed in any position, and can be easily repositioned while in-line
- Easy maintenance — seat and plug can be inspected without removing body from the line
- Completely self-operated — no external power source required
- Tight shutoff — soft elastomer plug provides ANSI Class VI shutoff
- 316/316L SST body/trim and tri-clamp, quick disconnect clamp connection
- FDA-approved seals and diaphragms
- Electropolishing standard





Specifications

Line Sizes: 3/4" (DN20) & 1" (DN25)

End Connections
- Clamped — ISO/DIN or Tri Clamp
- Flanged — 150#, 300#, PN25/40 & sterile flanges

Materials
- Body & Housing: SA351 Gr. CF8M 316SS, OR CF3M 316L
- Seat: ASTM A479 316/316L
- Plug: ASTM A479 316L and FDA-approved Viton
- Diaphragm: Viton (FDA)
- Aspirator Tube: FDA USP Class VI Teflon

Surface finish: Internal and external body surface finish is as cast. Electropolishing is standard.

Service: Air or gas

Shutoff: ANSI Class VI

Temperature Range: -20°F (-29°C) to 200°F (93°C)

Maximum Inlet Pressure: 150 psi (10 bar)

Reduced Pressure Control Range:
- 1.0 to 2.5 inches w.c. (2,5 to 6,2 mbar)
- 2.0 to 5.5 inches w.c. (5,0 to 13,7 mbar)
- 4.0 to 10.0 inches w.c. (10,0 to 24,9 mbar)
- 5.0 to 30.0 inches w.c. (12,4 to 74,7 mbar)
- 0.5 to 1.75 psig (0,03 to 0,12 bar)
- 1.0 to 3.5 psig (0,07 to 0,24 bar)

Orifice Sizes (Interchangeable): 1/8" (3mm), 3/16" (5mm), 1/4" (6mm), 5/16" (8mm), 3/8" (10mm), 7/16" (11mm), 1/2" (13mm), 9/16" (14mm)

STERIFLOW
a division of Jordan Valve

Steriflow by Jordan Valve
3170 Wasson Road • Cincinnati, OH 45209
513.533.5600 • 800.543.7311 • 513.871.0105 (f)
steriflow@richardsind.com • www.steriflowvalve.com

3/4" N_2 MAX FLOW CAPACITY: SCFH

To select the orifice size for your valve you need to know P1 (inlet pressure). P2 (outlet pressure set point), and maximum flow in SCFH.
1. Select the row that best represents your outlet Set Pressure (P2)
2. Select the sub-row that is representative of your Inlet Pressure (P1)
3. Find the Flow rate in that sub-row that encompasses your maximum flow. Look at the orifice column heading to determine your specific orifice size.

Set Pressure	Inlet (psi)	Orifice Size							
		1/8"	3/16"	1/4"	5/16"	3/8"	7/16"	1/2"	9/16"
2" H20 (1-2.5" H20)** 1" H20 Droop 2" H20 Boost*	5	201	374	430	261	477	888	1043	1169
	10	213	402	456	580	506	784	943	
	20	222	392	475	619	361			
	40	299	465	639	764				
	60	665	897	1161					
	80	816	873	1139					
	100	598	640						
	150	770	825						
3" H20 (2-5" H20)** 1" H20 Droop 2" H20 Boost*	5	239	373	503	560	613	886	1163	1195
	10	231	402	566	580	591	783	977	
	20	211	392	570	619	295			
	40	277	465	649	764				
	60	597	897	1194					
	80	753	873	976					
	100	675	776						
	150	880	825						
7" H20 (4-10" H20) 1" H20 Droop 2" H20 Boost*	5	220	295	372	409	441	619	799	661
	10	277	427	578	527	476	732	982	
	20	258	462	661	893	1118	1154		
	35	276	592	897	967	1035	1294		
	75	525	980	1426					
	90	727	1364						
	100	813	1503						
	150	1040	1926						
28" H20 (5-30" H20) 5-1/2" H20 Droop	5	302	454	604	722	839	941	1040	1074
	10	337	533	723	981	1239	1378	1514	
	30	283	816	1335	1666	1982	2154		
	45	617	1373	2058	2487				
	60	817	1866	2906	2899				
	75	820	1812						
	100	840	1867						
	150	1089	2421						
1.25 psi (0.5 - 1.75 psi) 0.2 psi Droop	5	180	272	439	395	526	465	658	921
	10	235	333	522	535	783	665	913	848
	30	279	469	824	785	1014	1141		
	45	354	561	886	856	1033			
	60	418	669	1003	937	1087			
	75	427	762	1152					
	100	543	949	1402					
	150	715	1266	1816					
3 psi (1 - 3 .5 psi) 0.3 psi Droop	5	145	217	289	315	338	371	402	675
	10	209	312	418	502	592	625	661	731
	30	226	468	701	783	859	1136		
	45	354	561	812	856	856			
	60	415	669	922	937	945			
	75	427	762	1059					
	100	503	949	1408					
	150	660	1266	1816					

Flow in this area is outside the operating parameters of the valve

* Boost refers to a small rise in outlet pressure set point that can occur, and is characteristic of, this type of regulator when flow nears the valve's maximum capacity. To understand this phenomenon and to determine your maximum flow requirements, see API 2000

** Inverted mounting (spring housing adjustment cap facing floor) is recommended for set points within this spring range.

3/4" N_2 MAX FLOW CAPACITY: NM3/H

To select the orifice size for your valve you need to know P1 (inlet pressure). P2 (outlet pressure set point), and maximum flow in NM3/H.
1. Select the row that best represents your outlet Set Pressure (P2)
2. Select the sub-row that is representative of your Inlet Pressure (P1)
3. Find the Flow rate in that sub-row that encompasses your maximum flow. Look at the orifice column heading to determine your specific orifice size.

Set Pressure	Inlet (bar)	Orifice Size							
		1/8"	3/16"	1/4"	5/16"	3/8"	7/16"	1/2"	9/16"
2" H20 (1-2.5" H20)** 1" H20 Droop 2" H20 Boost*	0.345	5.7	10.6	12.2	7.4	13.5	25.1	29.5	33.1
	0.689	6.0	11.4	12.9	16.4	14.3	22.2	26.7	
	1.38	6.3	11.1	13.4	17.5	10.2			
	2.76	8.5	13.2	18.1	21.6				
	4.14	18.8	25.4	32.9					
	5.52	23.1	24.7	32.2					
	6.89	16.9	18.1						
	10.3	21.8	23.3						
3" H20 (2-5" H20)** 1" H20 Droop 2" H20 Boost*	0.345	6.8	10.6	14.2	15.8	17.3	25.1	32.9	33.8
	0.689	6.5	11.4	16.0	16.4	16.7	22.2	27.6	
	1.38	6.0	11.1	16.1	17.5	8.3			
	2.76	7.8	13.2	18.4	21.6				
	4.14	16.9	25.4	33.8					
	5.52	21.3	24.7	27.6					
	6.89	19.1	22.0						
	10.3	24.9	23.3						
7" H20 (4-10" H20) 1" H20 Droop 2" H20 Boost*	0.345	6.2	8.3	10.5	11.6	12.5	17.5	22.6	18.7
	0.689	7.8	12.1	16.4	14.9	13.5	20.7	27.8	
	1.38	7.3	13.1	18.7	25.3	31.6	32.7		
	2.41	7.8	16.8	25.4	27.4	29.3	36.6		
	5.17	14.9	27.7	40.4					
	6.21	20.6	38.6						
	6.89	23.0	42.5						
	10.3	29.4	54.5						
28" H20 (5-30" H20) 5-1/2" H20 Droop	0.345	8.5	12.8	17.1	20.4	23.7	26.6	29.4	30.4
	0.689	9.5	15.1	20.5	27.8	35.1	39.0	42.8	
	2.07	8.0	23.1	37.8	47.1	56.1	61.0		
	3.10	17.5	38.9	58.2	70.4				
	4.14	23.1	52.8	82.2	82.0				
	5.17	23.2	51.3						
	6.89	23.7	52.8						
	10.3	30.8	68.5						
0,09 bar (0.03 - 0,12 bar) 0,01 bar Droop	0.345	5.1	7.7	12.4	11.2	14.9	13.2	18.6	26.1
	0.689	6.7	9.4	14.8	15.1	22.2	18.8	25.8	24.0
	2.07	7.9	13.3	23.3	22.2	28.7	32.3		
	3.10	10.0	15.9	25.1	24.2	29.2			
	4.14	11.8	18.9	28.4	26.5	30.8			
	5.17	12.1	21.5	32.6					
	6.89	15.4	26.9	39.7					
	10.3	20.2	35.8	51.4					
0,21 bar (0,07 - 0,24 bar) 0,02 bar Droop	0.345	4.1	6.1	8.2	8.9	9.5	10.5	11.4	19.1
	0.689	5.9	8.8	11.8	14.2	16.8	17.7	18.7	20.7
	2.07	6.4	13.2	19.8	22.2	24.3	32.1		
	3.10	10.0	15.9	23.0	24.2	24.2			
	4.14	11.7	18.9	26.1	26.5	26.7			
	5.17	12.1	21.5	30.0					
	6.89	14.2	26.9	39.8					
	10.3	18.7	35.8	51.4					

Flow in this area is outside the operating parameters of the valve

* Boost refers to a small rise in outlet pressure set point that can occur, and is characteristic of, this type of regulator when flow nears the valve's maximum capacity. To understand this phenomenon and to determine your maximum flow requirements, see API 2000

** Inverted mounting (spring housing adjustment cap facing floor) is recommended for set points within this spring range.

1" N_2 MAX FLOW CAPACITY: SCFH

To select the orifice size for your valve you need to know P1 (inlet pressure). P2 (outlet pressure set point), and maximum flow in SCFH.
1. Select the row that best represents your outlet Set Pressure (P2)
2. Select the sub-row that is representative of your Inlet Pressure (P1)
3. Find the Flow rate in that sub-row that encompasses your maximum flow. Look at the orifice column heading to determine your specific orifice size.

Set Pressure	Inlet (psi)	Orifice Size							
		1/8"	3/16"	1/4"	5/16"	3/8"	7/16"	1/2"	9/16"
2" H20 (1-2.5" H20)** 1" H20 Droop 2" H20 Boost*	5	226	420	483	630	536	998	1172	1313
	10	328	618	702	893	779	1206	1450	
	20	493	872	1055	1376	803			
	40	786	1224	1681	2010				
	60	1073	1447	1872					
	80	1360	1455	1898					
	100	1648	1763						
	150	2146	2256						
3" H20 (2-5" H20)** 1" H20 Droop 2" H20 Boost*	5	268	419	565	629	689	996	1307	1342
	10	356	618	870	892	910	1205	1503	
	20	469	872	1266	1376	656			
	40	730	1224	1707	2010				
	60	963	1447	1926					
	80	1255	1455	1627					
	100	1534	1763						
	150	1981	2256						
7" H20 (4-10" H20) 1" H20 Droop 2" H20 Boost*	5	283	378	477	524	565	793	1024	848
	10	380	585	791	722	653	1003	1345	
	20	488	871	1247	1684	2110	2177		
	35	673	1444	2188	2358	2525	3155		
	75	1221	2278	3317					
	90	1399	2623						
	100	1534	2836						
	150	1981	3687						
28" H20 (5-30" H20) 5-1/2" H20 Droop	5	318	478	636	760	883	991	1095	1130
	10	388	613	831	1128	1424	1584	1741	
	30	373	1074	1756	2192	2608	2834		
	45	718	1596	2393	2892				
	60	929	2121	3302	3294				
	75	1139	2517						
	100	1449	3219						
	150	1871	4182						
1.25 psi (0.5 - 1.75 psi) 0.2 psi Droop	5	198	299	482	434	578	511	723	1012
	10	267	378	593	608	890	756	1038	964
	30	328	552	969	924	1193	1342		
	45	479	758	1197	1157	1396			
	60	624	998	1497	1398	1622			
	75	689	1229	1858					
	100	920	1609	2376					
	150	1211	2091	3081					
3 psi (1 - 3.5 psi) 0.3 psi Droop	5	159	238	318	346	371	408	442	742
	10	237	355	475	571	672	710	752	831
	30	266	550	825	921	1011	1337		
	45	479	758	1097	1157	1157			
	60	619	998	1376	1398	1410			
	75	689	1229	1708					
	100	852	1609	2387					
	150	1100	2091	3081					

Flow in this area is outside the operating parameters of the valve

* Boost refers to a small rise in outlet pressure set point that can occur, and is characteristic of, this type of regulator when flow nears the valve's maximum capacity. To understand this phenomenon and to determine your maximum flow requirements, see AP 2000.

** Inverted mounting (spring housing adjustment cap facing floor) is recommended for set points within this spring range.

1" N_2 MAX FLOW CAPACITY: NM3/H

To select the orifice size for your valve you need to know P1 (inlet pressure). P2 (outlet pressure set point), and maximum flow in NM3/H.
1. Select the row that best represents your outlet Set Pressure (P2)
2. Select the sub-row that is representative of your Inlet Pressure (P1)
3. Find the Flow rate in that sub-row that encompasses your maximum flow. Look at the orifice column heading to determine your specific orifice size.

Set Pressure	Inlet (bar)	Orifice Size							
		1/8"	3/16"	1/4"	5/16"	3/8"	7/16"	1/2"	9/16"
2" H20 (1-2.5" H20)** 1" H20 Droop 2" H20 Boost*	0.345	6.40	11.9	13.7	17.8	15.2	28.2	33.2	37.2
	0.689	9.28	17.5	19.9	25.3	22.0	34.1	41.0	
	1.38	14.0	24.7	29.9	38.9	22.7			
	2.76	22.2	34.6	47.6	56.9				
	4.14	30.4	41.0	53.0					
	5.52	38.5	41.2	53.7					
	6.89	46.6	49.9						
	10.3	60.7	63.8						
3" H20 (2-5" H20)** 1" H20 Droop 2" H20 Boost*	0.345	7.58	11.9	16.0	17.8	19.5	28.2	37.0	38.0
	0.689	10.1	17.5	24.6	25.2	25.8	34.1	42.5	
	1.38	13.3	24.7	35.8	38.9	18.6			
	2.76	20.7	34.6	48.3	56.9				
	4.14	27.3	41.0	54.5					
	5.52	35.5	41.2	46.0					
	6.89	43.4	49.9						
	10.3	56.1	63.8						
7" H20 (4-10" H20) 1" H20 Droop 2" H20 Boost*	0.345	8.01	10.7	13.5	14.8	16.0	22.4	29.0	24.0
	0.689	10.8	16.6	22.4	20.4	18.5	28.4	38.1	
	1.38	13.8	24.7	35.3	47.7	59.47	61.6		
	2.41	19.1	40.9	61.9	66.7	71.5	89.3		
	5.17	34.6	64.5	93.9					
	6.21	39.6	74.2						
	6.89	43.4	80.3						
	10.3	56.1	104						
28" H20 (5-30" H20) 5-1/2" H20 Droop	0.345	9.00	13.5	18.0	21.5	25.0	28.1	31.0	32.0
	0.689	11.0	17.6	23.5	31.9	40.3	44.8	49.3	
	2.07	10.6	30.4	49.7	62.0	73.8	80.2		
	3.10	20.3	45.2	67.7	81.8				
	4.14	26.3	60.0	93.5	93.2				
	5.17	32.2	71.2						
	6.89	41.0	91.1						
	10.3	53.0	118						
0,09 bar (0.03 - 0,12 bar) 0,01 bar Droop	0.345	5.6	8.46	13.6	12.3	16.4	14.5	20.5	20.5
	0.689	7.56	10.7	16.8	17.2	25.2	21.4	29.4	29.4
	2.07	9.28	15.6	27.4	26.2	33.8	38.0		
	3.10	13.6	21.5	33.9	32.7	39.5			
	4.14	17.7	28.2	42.4	39.6	45.9			
	5.17	19.5	34.8	52.6					
	6.89	26.0	45.5	67.2					
	10.3	34.3	59.2	87.2					
0,21 bar (0,07 - 0,24 bar) 0,02 bar Droop	0.345	4.5	6.74	9.0	9.8	10.5	11.6	12.5	21.0
	0.689	6.7	10.0	13.4	16.2	19.0	20.1	21.3	23.5
	2.07	7.53	15.6	23.4	26.1	28.6	37.8		
	3.10	7.90	21.5	31.1	32.7	32.7			
	4.14	17.5	28.2	38.9	39.6	39.9			
	5.17	19.5	34.8	48.3					
	6.89	24.1	45.5	67.6					
	10.3	31.1	59.2	87.2					

Flow in this area is outside the operating parameters of the valve

* Boost refers to a small rise in outlet pressure set point that can occur, and is characteristic of, this type of regulator when flow nears the valve's maximum capacity. To understand this phenomenon and to determine your maximum flow requirements, see API 2000

** Inverted mounting (spring housing adjustment cap facing floor) is recommended for set points within this spring range.

DIMENSIONS

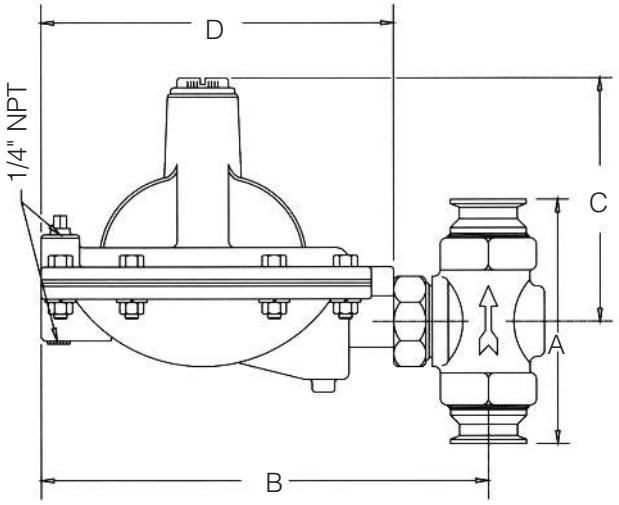

Valve Size	Dimensions, Inches			
	A	B	C	D
3/4"	5.88	11.31	5.75	9.00
1"	5.88	11.31	5.75	9.00

Valve Size	Dimensions, Mm			
	A	B	C	D
DN20	149,4	287,3	146,1	228,6
DN25	149,4	287,3	146,1	228,6

ORDERING SCHEMATIC (3/4" - 1")

Model		Size		Material	/	1&2	3&4	5&6	7&8
	—		—						

Model	
968	Mark 968 Sanitary Gas Regulator

Size	
075	3/4" (DN20)
100	1" (DN25)

Body Material	
S6	ASTM A351 Gr. CF8M 316
6L	SA 351 Gr. CF3M, 316L

1&2	Connections & Body Finish
TC	Tri Clamp - Electropolished Finish
DC	DIN - Tri Clamp - Electropolished Finish
SC	ISO - Tri Clamp - Electropolished Finish
ZZ	Non-Standard

3&4	Orifice Finish
	Electropolish
01	1/8" (3mm)
02	3/16" (5mm)
03	1/4" (6mm)
04	5/16" (8mm)
05	3/8" (10mm)
06	7/16" (11mm)
07	1/2" (13mm)
08	9/16" (14mm)
ZZ	Non-Standard

5&6	Range
01	1"-2.5" W.C. (2,5-6,2 mbar)
02	2"-5.5" W.C. (5,0-13,7 mbar)
03	4"-10" W.C. (10,0-24,9 mbar)
04	5"-30" W.C. (12,4-74,7 mbar)
05	0.5-1.75 psi (0,03-0,12 bar)
06	1-3.5 psi (0,07-0,24 bar)
ZZ	Non-Standard

7&8	Actuator Finish & Diaphragm
SD	Electropolished w/Viton (FDA)
ZZ	Non-Standard

Mark 968 Series

Sanitary Gas Regulator (1-1/2" – 2")

The 1-1/2" and 2" valves are for use on Pharmaceutical or Food & Beverage large vessel applications or other low pressure gas regulation applications such as gas for motive force fluid movement, or Single Use Disposable bag integrity testing or inflation. In a tank blanketing application, the Mark 968 is used to control the flow of the blanketing gas into the tank to maintain the proper positive pressure. Once the blanket has been established, a small flow of nitrogen is continually admitted to the tank to keep the blanket fresh. These valves are often used in conjunction with the Mark 958 back pressure gas regulator, used to vent gas from the tank to prevent blanketing pressure from rising to a level that could damage the tank.

The Mark 968 comes standard with an extra large diaphragm to give set point control as low as 2.0" W.C. (4,98 mbar). In addition, the "S" pattern body design allows for high flow capacity and bubble tight shutoff.

Specifications

Line Sizes: 1-1/2" (DN40), 2" (DN50)

End Connections

- Clamp — ISO, DIN, Tri-Clamp
- Flanged — 150#, 300#, Sanitary
- Others upon request

Materials

- Body: Stainless Steel (SA351/CF8M)
- Trim: 316/316L Stainless Steel
- Seat: 316/316L Stainless Steel with Viton (FDA)
- Diaphragm: Viton (FDA)

Surface finish: Internal and external body surface finish is as cast. Electropolishing is standard.

Shutoff: ANSI Class VI

Ranges:

- 2 to 5 inches w.c. (4,98 to 12,5 mbar)
- 4 to 8 inches w.c. (9,96 to 19,93 mbar)
- 8 to 28 inches w.c. (19,93 to 69,75 mbar)
- 10 to 17 inches w.c. (24,91 to 42,35 mbar)
- 14 to 28 inches w.c. (34,87 to 69,75 mbar)
- 0.75 to 1 psi (51,71 to 68,95 mbar)
- 1 to 2 psi (68,95 to 137,90 mbar)
- 1.5 to 3 psi (0,10 to 0,21 bar)
- 3 to 5 psi (0,21 to 0,34 bar)

Cv Rating: 23 (20 Kv)

Pressure Temperature Rating: 25 psi @ 100°F (1,72 bar @ 27,8 °C), 25 psi @ 275°F (1,72 bar @ 135°C)

Maximum Pressure Drop: 25 psig (1,72 bar)

Dimensions

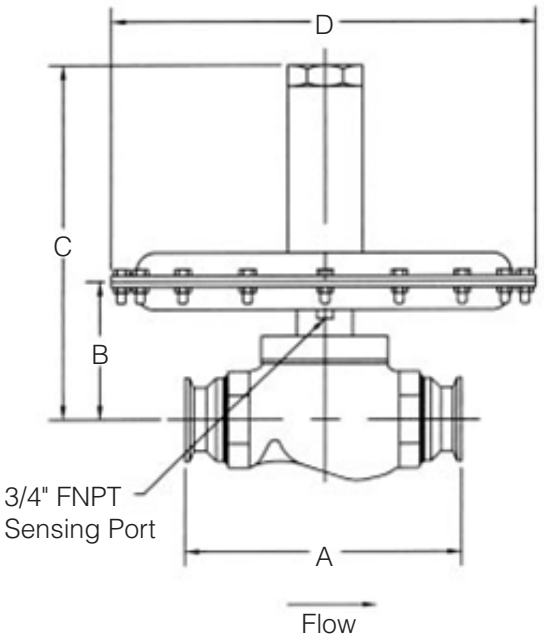

Valve Size	Dimensions, Inches			
	A	B	C	D
1-1/2"	8.75	4.93	12.32	15.00
2"	8.75	4.93	12.32	15.00

Valve Size	Dimensions, Inches			
	A	B	C	D
DN40	222,3	125,2	312,9	381,0
DN50	222,3	125,2	312,9	381,0

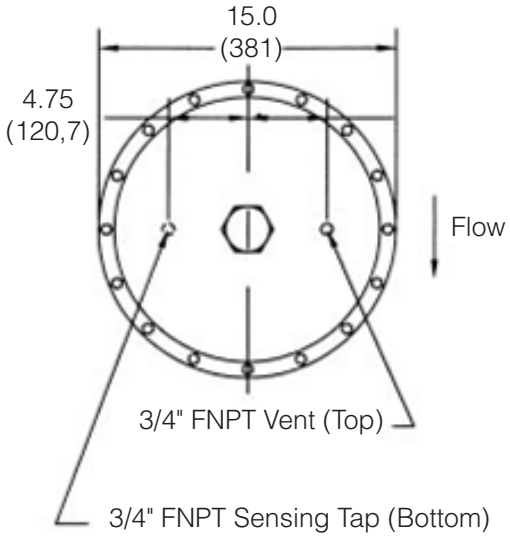

1-1/2" N_2 FLOW CAPACITIES: SCFH (SHADED), NM^3/H (UNSHADED)

To find the maximum flow rate that this valve can control to, you need to know P1 (inlet pressure), P2 (outlet pressure set point), and maximum flow in SCFH.

1. Select the Range row that encompasses your outlet Set Pressure (P2).
2. Select the sub-row that is closest to your actual outlet Set Pressure (P2)
3. Select the column that best represents your Inlet Pressure (P1).
4. The maximum flow rate that the valve can regulate is the number represented at the intersection of the sub row and the Inlet Pressure column.

Range	Outlet Pressure Set Point	Accuracy	Inlet Pressure						
			2.0 psi (0,14 bar)	3.0 psi (0,21 bar)	5.0 psi (0,34 bar)	10.0 psi (0,69 bar)	15.0 psi (1,03 bar)	20.0 psi (1,38 bar)	25.0 psi (1,72 bar)
2.0-5.0" WC*	3.0" WC	0.75" WC	4853	5185	5999				
4,98-12,5 mbar*	7,47 mbar	1,87 mbar	137	147	170				
4.0-8.0" WC*	5.0" WC	1" WC	4675	5532	6748	8599			
	7.0" WC		4987	5747	6482	6984			
9,96-19,93 mbar*	12,45 mbar	2,49 mbar	132	157	191	243			
	17,44 mbar		141	163	184	198			
8.0-28.0" WC*	10.0" WC	1.5" WC	5601	5297	6622	7720	8468	7638	
	25.0" WC		4293	4672	4357	4858	6876	7220	
19,93-69,75 mbar*	24,91 mbar	3,74 mbar	159	150	188	219	240	216	
	62,27 mbar		122	132	123	138	195	204	
10.0-17.0" WC	12.0" WC	2" WC	4582	5984	7169	10367	10228	10838	
	15.0" WC		4297	5200	7111	9778	10310	10748	
24,91-42,35 mbar	28,89 mbar	4,98 mbar	130	169	203	294	290	307	
	37,36 mbar		122	147	201	277	292	304	
14.0-28.0" WC	15.0" WC	2.5" WC	4070	5737	8261	10811	12068	13414	13120
	25.0" WC		3123	4487	6675	9057	10792	11608	12938
34,87-69,75 mbar	37,36 mbar	6,23 mbar	115	162	234	306	342	380	372
	62,27 mbar		88	127	189	256	306	329	366
0.75-1 psi	0.75 psi	0.25 psi	4843	7253	9628	11573	13833	15278	17038
	1 psi		4638	6286	9501	11557	13892	15253	17026
51,71-68,95 mbar	51,71 mbar	12,93 bar	137	205	273	328	392	433	482
	68,75 mbar		131	178	269	327	393	432	482
1-2 psi	1.5 psi	0.3 psi		4352	8736	11529	13957	15514	17358
	2.0 psi			3505	7588	11281	13764	15351	17206
68,95-137,0 mbar	0,10 bar	20,69 mbar		123	247	326	395	439	492
	0,14 bar			99	215	319	390	435	487
1.5-3 psi	2.0 psi	0.4 psi		3929	8034	11339	13871	15466	17332
	3.0 psi				6057	10924	13626	15327	17252
0.10-0,21 bar	0,14 bar	27,50 mbar		111	228	321	393	438	491
	0,21 bar				172	309	386	434	489
3-5 psi	3.5 psi	0.5 psi			3507	10781	13598	15365	17332
	5.0 psi					9639	12792	14682	16688
0,21-0,34 bar	0,24 bar	34,38 mbar			99	305	385	435	491
	0,34 bar					273	362	416	473

Flow in this area is outside the operating parameters of the valve

Flow in this area is outside the operating parameters of the valve

Nitrogen at 0.97 s.g. in scfh and Nm^3/h.

Operation in shaded areas not recommended.

* Inverted mounting (spring adjustment side of diaphragm facing floor) is required for set points below 10" WC (24,9 mbar).

2" N_2 FLOW CAPACITIES: SCFH (SHADED), NM^3/H (UNSHADED)

To find the maximum flow rate that this valve can control to, you need to know P1 (inlet pressure), P2 (outlet pressure set point), and maximum flow in SCFH.

1. Select the Range row that encompasses your outlet Set Pressure (P2).
2. Select the sub-row that is closest to your actual outlet Set Pressure (P2)
3. Select the column that best represents your Inlet Pressure (P1).
4. The maximum flow rate that the valve can regulate is the number represented at the intersection of the sub row and the Inlet Pressure column.

Range	Outlet Pressure Set Point	Accuracy	Inlet Pressure						
			2.0 psi (0,14 bar)	3.0 psi (0,21 bar)	5.0 psi (0,34 bar)	10.0 psi (0,69 bar)	15.0 psi (1,03 bar)	20.0 psi (1,38 bar)	25.0 psi (1,72 bar)
2.0-5.0" WC*	3.0" WC	0.75" WC	5392	5761	6666				
4,98-12,5 mbar*	7,47 mbar	1,87 mbar	153	163	189				
4.0-8.0" WC*	5.0" WC	1" WC	5195	6147	7498	9554			
	7.0" WC		5541	6385	7202	7760			
9,96-19,93 mbar*	12,45 mbar	2,49 mbar	147	174	212	271			
	17,44 mbar		157	181	204	220			
8.0-28.0" WC*	10.0" WC	1.5" WC	6223	5885	7358	8578	9408	8486	
	25.0" WC		4770	5191	4841	5398	7640	8022	
19,93-69,75 mbar*	24,91 mbar	3,74 mbar	176	167	208	243	266	240	
	62,27 mbar		135	147	137	153	216	227	
10.0-17.0" WC	12.0" WC	2" WC	5091	6649	7965	11519	11365	12042	
	15.0" WC		4775	5778	7901	10864	11456	11942	
24,91-42,35 mbar	28,89 mbar	4,98 mbar	144	188	226	326	322	341	
	37,36 mbar		135	164	224	308	324	338	
14.0-28.0" WC	15.0" WC	2.5" WC	4523	6374	9179	12013	13409	14904	14578
	25.0" WC		3470	4986	7416	10063	11991	12898	14376
34,87-69,75 mbar	37,36 mbar	6,23 mbar	128	180	260	340	380	422	413
	62,27 mbar		98	141	210	285	340	365	407
0.75-1 psi	0.75 psi	0.25 psi	5382	8059	10698	12859	15370	16976	18931
	1 psi		5153	6984	10556	12841	15436	16948	18918
51,71-68,95 mbar	51,71 mbar	12,93 bar	152	228	303	364	435	481	536
	68,75 mbar		146	198	299	364	437	480	536
1-2 psi	1.5 psi	0.3 psi		4835	9706	12810	15508	17238	19286
	2.0 psi			3895	8431	12534	15293	17056	19118
68,95-137,0 mbar	0,10 bar	20,69 mbar		137	275	363	439	488	546
	0,14 bar			110	239	355	433	483	541
1.5-3 psi	2.0 psi	0.4 psi		4365	8927	12599	15412	17185	19258
	3.0 psi				6731	12138	15140	17030	19169
0.10-0,21 bar	0,14 bar	27,50 mbar		124	253	357	436	487	545
	0,21 bar				191	344	429	482	543
3-5 psi	3.5 psi	0.5 psi			3897	11979	15109	17072	19258
	5.0 psi					10710	14214	16314	18543
0,21-0,34 bar	0,24 bar	34,38 mbar			110	339	428	483	545
	0,34 bar					303	402	462	525

Flow in this area is outside the operating parameters of the valve

Flow in this area is outside the operating parameters of the valve

Nitrogen at 0.97 s.g. in scfh and Nm^3/h.

Operation in shaded areas not recommended.

* Inverted mounting (spring adjustment side of diaphragm facing floor) is required for set points below 10" WC (24,9 mbar).

ORDERING SCHEMATIC (1-1/2" – 2")

Model		Size		Material	/	1&2	3&4	5&6	7&8	9&10
	—		—							

Model	
968	Mark 968 Sanitary Gas Regulator

Size	
150	1-1/2" (DN40)
200	2" (DN50)

Body Material	
S6	ASTM A351 Gr. CF8M 316

1&2	Connections & Body Finish
TC	Tri Clamp - Electropolished Finish
DC	DIN - Tri Clamp - Electropolished Finish
SC	ISO - Tri Clamp - Electropolished Finish
ZZ	Non-Standard

3&4	Seat & Diaphragm / Seat Finish
VN	Viton / Electropolished Seat

5&6	Range
07	2-5" WC (4,98-12,5 mbar)
08	4-8" WC (9,96-19,93 mbar)
09	8-28" WC (19,93-69,75 mbar)
10	10-17" WC (24,91-42,35 mbar)
11	14-28" WC (34,87-69,75 mbar)
12	0.75-1 psi (51,71-68,95 mbar)
13	1-2 psi (68,95-137,90 mbar)
14	1.5-3 psi (0,10-0,21 bar)
15	3-5 psi (0,21-0,34 bar)
ZZ	Non-Standard

7&8	Actuator Finish
SD	Electropolished
ZZ	Non-Standard

9&10	Bushing
TF	Teflon-FDA
ZZ	Non-Standard

STERIFLOW
a division of Jordan Valve

Steriflow, a division of Jordan Valve
3170 Wasson Road • Cincinnati, OH 45209
513.533.5600 • 800.543.7311 • 513.871.0105 (f)
steriflow@richardsind.com • www.steriflowvalve.com

Steriflow Valve reserves the right to make revisions to its product, specifications, literature and related information without notice. Please visit our website at www.steriflowvalve.com for the latest information on our products.