Millipore®

www.sigmaaldrich.com

Catalogue Number:
NA##/32-221 and
NU###/32-221

Specification Sheet

NovAseptic® Valve, Valve Body, Flow through 180°

Product Description

The NovAseptic® valve is specifically designed for aseptic applications and complies with the most stringent cleanability and sterilization requirements. The focus on aseptic design is a significant feature for all valves. The NovAseptic® valve is designed for minimum dead leg, complete drainability and high chemical resistance.

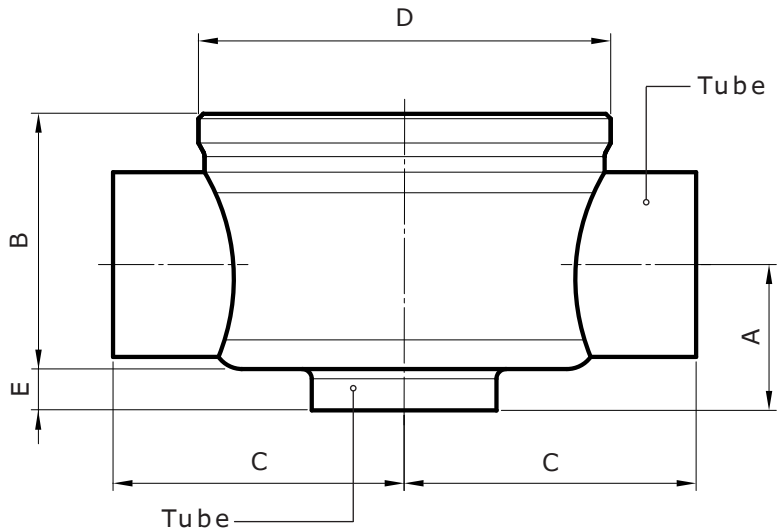

Catalogue No. Structure
NA##/32-221
NU###/32-221

= NA tube size
= NU tube size

Nominal Dimensions in mm (in.)

Catalogue No.	A	B	C	D*	E	SMS Tube 3008 Tube Size	US Tube ASTM® A269/270 Tube Size
NA12/32-221	14.8 (0.583)	22.0 (0.866)	30.0 (1.181)	TR40x2	6.5 (0.256)	12.0 x 1.0	
NU050/32-221							12.7 x 1.65 (0.50 x 0.065)
NA18/32-221	20.0 (0.787)	29.5 (1.161)	40.0 (1.575)	TR55x2	9.0 (0.354)	18.0 x 1.5	
NU075/32-221							19.1 x 1.65 (0.75 x 0.065)
NA25/32-221	25.1 (0.988)	39.5 (1.555)	50.0 (1.969)	TR75x2	10.0 (0.394)	25.0 x 1.2	
NU100/32-221							25.4 x 1.65 (1.0 x 0.065)
NA38/32-221	29.8 (1.173)	52.5 (2.067)	60.0 (2.362)	TR85x2	8.5 (0.335)	38.0 x 1.2	
NU150/32-221							38.1 x 1.65 (1.5 x 0.065)
NA51/32-221	39.8 (1.567)	65.5 (2.579)	75.0 (2.953)	TR109x2	12.0 (0.472)	51.0 x 1.2	
NU200/32-221							50.8 x 1.65 (2.0 x 0.065)
NA76/32-221	50.9 (2.004)	98.9 (3.894)	85.0 (3.346)	TR146x2	9.0 (0.354)	76.2 x 1.65	
NU300/32-221							76.2 x 1.65 (3.0 x 0.065)

* Non-standard thread, special thread to fit NovAseptic® actuators.

The life science business of Merck operates as MilliporeSigma in the U.S. and Canada.

MERCK

Recommended Orientation for full drainability of NovAseptic® Diaphragm Valves

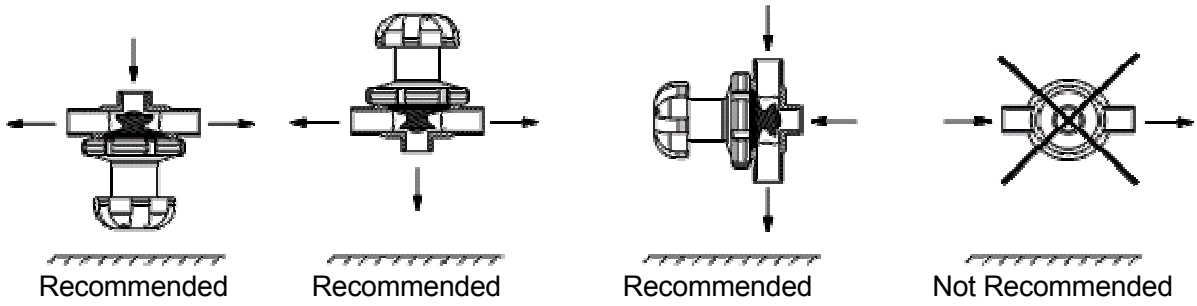

Specifications

Net Volume (valve cavity, diaphragm applied)						
Valve Body	**NA12/NU050**	**NA18/NU075**	**NA25/NU100**	**NA38/NU150**	**NA51/NU200**	**NA76/NU300**
Volume mL	4	10	30	80	200	470

Net Weight (approximate)						
Valve Body	**NA12/NU050**	**NA18/NU075**	**NA25/NU100**	**NA38/NU150**	**NA51/NU200**	**NA76/NU300**
Weight kg (lb)	0.1 (0.22)	0.2 (0.44)	0.4 (0.88)	0.8 (1.8)	1.4 (3.09)	4.3 (9.48)

Material				
	Bar Stainless Steel in Compliance with		**Tubing** Stainless Steel in Compliance with	
Material Code	316L	EN 1.4404	TP316L	EN 1.4404
Technical Requirements	ASME® SA-479	EN 10272	ASTM® A269/270	EN 10217-7/EN 10216-5

Specifications	
Surface Roughness	Internal surface (Electro polished) Ra ≤ 0.38 µm (15 µin) External surface Ra ≤ 1.6 µm (63 µin)
Design Temperature, Valve Body	–80 to 200 ºC (–112 to 392 ºF)
Design Pressure, Valve Body	–1 to 10 bar(g) (–14.5 to 145 psi(g))
Note	The valve body can only be used with NovAseptic® diaphragm, actuator and position indicator (optional). The applied diaphragm and actuator have different design temperature and/or pressure limits. The weakest component in the assembled product determines the maximum operating/design temperature and pressure limits.
Labeling	Each valve body is individually marked for full traceability and heat No. according to our QA routines.
Packaging	All open ends on the valve body are protected with plastic covers on delivery and packaged in a closed box.
Quality Control	Our quality assurance system guarantees the control and traceability at all stages of the manufacturing.
Regulatory	• The NovAseptic® valves, used with gas group 2 and liquid group 1, fall under the art. 4 § 3 of the Pressure Equipment Directive (2014/68/EU). They are not CE marked. They have been designed and manufactured following the sound engineering practices. • NovAseptic® valves follow the applicable ASME BPE guideline sections.
Options	For non-standard NovAseptic® valve body options, please contact us for further information

Technical Assistance

For more information, please visit **SigmaAldrich.com**
for up-to-date worldwide contact information

© 2021 Merck KGaA, Darmstadt, Germany and/or its affiliates. All Rights Reserved. Merck, the vibrant M, Millipore, Sigma-Aldrich, and NovAseptic are trademarks of Merck KGaA, Darmstadt, Germany or its affiliates. All other trademarks are the property of their respective owners. Detailed information on trademarks is available via publicly accessible resources.

Lit No. SP1101EN00 Ver. 1.0
33859
04/2021