Millipore®

www.sigmaaldrich.com

Catalogue Number: NA#/22TR

Specification Sheet

NovAseptic® Valve, DIAPHRAGM, EPDM

Product Description

The NovAseptic® valve is specifically designed for aseptic applications and complies with the most stringent cleanability and sterilization requirements. The focus on aseptic design is a significant feature for all valves. The NovAseptic® valve is designed for minimum dead leg, complete drainability and high chemical resistance.

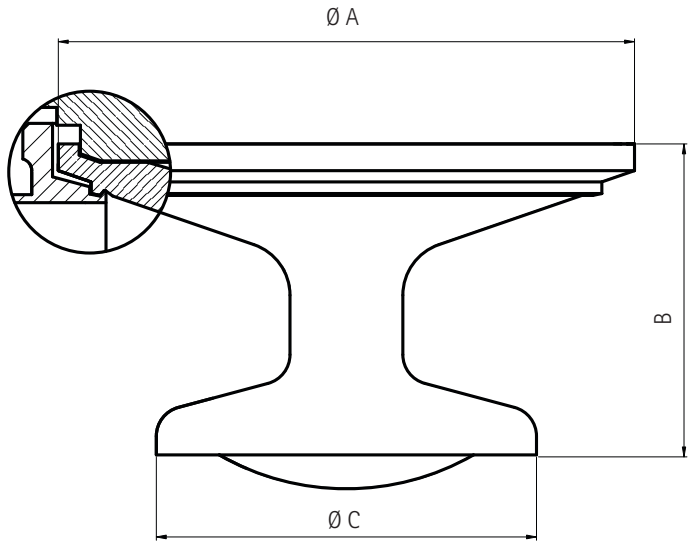

Catalogue Number Structure

NA#	/	22TR
|		|
Diaphragm Model		22TR = EPDM Diaphragm

Nominal Dimensions in mm (in.)

Catalogue Number	Ø A	B	Ø C	Compatible Valve NA#	Compatible Valve NU#
NA12/22TR	34.0 (1.339)	16.0 (0.630)	18.0 (0.709)	NA12	NU050
NA18/22TR	46.5 (1.831)	23.0 (0.906)	25.0 (0.984)	NA18	NU075
NA25/22TR	62.0 (2.441)	29.3 (1.154)	34.0 (1.339)	NA25	NU100
NA38/22TR	75.0 (2.953)	42.4 (1.669)	48.3 (1.902)	NA38	NU150
NA51/22TR	97.0 (3.819)	52.4 (2.063)	64.0 (2.520)	NA51	NU200
NA76/22TR	121.4 (4.779)	72.2 (2.835)	88.0 (3.465)	NA76	NU300

The life science business of Merck KGaA, Darmstadt, Germany
operates as MilliporeSigma in the U.S. and Canada.

Specifications

Net Weight (approximate)						
Diaphragm	NA12	NA18	NA25	NA38	NA51	NA76
Weight kg (lb)	0.01 (0.022)	0.02 (0.044)	0.05 (0.11)	0.10 (0.220)	0.16 (0.353)	0.44 (0.970)

Design Temperature	
	Short Term Use*
Max (Dry Heat)	135 °C (275 °F) except for NA76, 128 °C (262 °F)
Max (Steam)	135 °C (275 °F) except for NA76, 128 °C (262 °F)
Min	–30 °C (–22 °F)

* Note: <1 h continuously.

Additional Information	
Material	EPDM, ethylene propylene diene monomer rubber. The Diaphragm is manufactured from 100% EPDM.
Surface Roughness	Smooth (hydrophobic)
Design Pressure	–1 to 6 bar(g) (–14.5 to 87.0 psi(g))
Labeling	Each diaphragm is labeled for full LOT traceability according to our QA routines.
Packaging	The diaphragm is packaged in a closed box.
Quality Control	Our quality assurance system guarantees the control and traceability of the product.
Regulatory	All diaphragms are manufactured with materials in compliance with FDA regulations §177.2600 and supplied with statement. The diaphragm meets USP Biological Tests for Plastics, Class VI.

Technical Assistance

For more information, please visit **SigmaAldrich.com**
for up-to-date worldwide contact information

© 2023 Merck KGaA, Darmstadt, Germany and/or its affiliates. All Rights Reserved. The vibrant M, Millipore, Sigma-Aldrich, and NovAseptic are trademarks of Merck KGaA, Darmstadt, Germany or its affiliates. All other trademarks are the property of their respective owners. Detailed information on trademarks is available via publicly accessible resources.

SS7647EN00 Rev. 2.0
35309
04/2023