Millipore®

Catalog Number:
AX10-###

NovAseptic® Mixer, Rotor HS ATEX

Product Description

The NovAseptic® mixers offer a complete solution for mixing throughout the process line and are designed for a wide variety of mixing applications in the pharmaceutical and biotechnology industries.

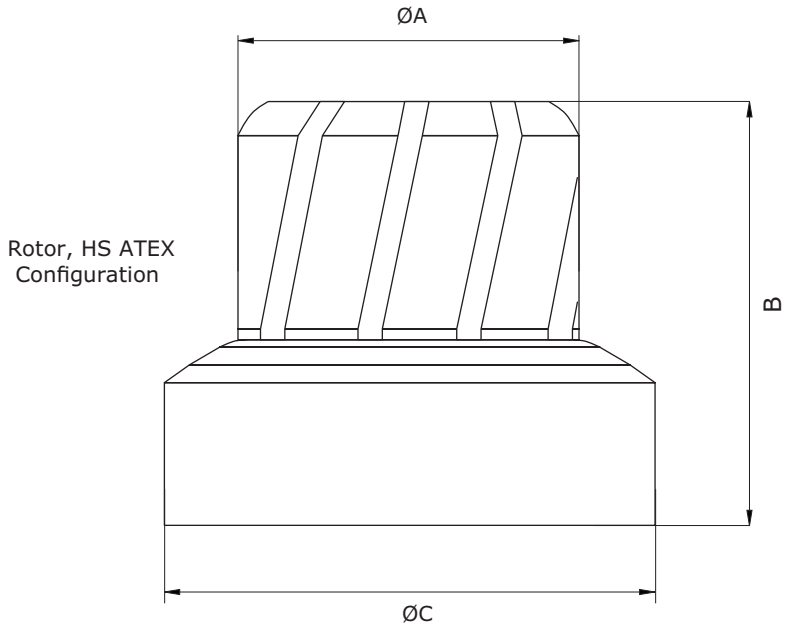

Rotor, HS ATEX Configuration

Nominal Dimensions in mm (in.)

AX10-###	A	B	C	NovAseptic® ATEX HS mixer assembly type
AX10-013	41 (1.61)	59 (2.32)	60 (2.36)	HS T10 ATEX
AX10-009	65 (2.56)	79 (3.11)	93 (3.66)	HS T60 ATEX
AX10-010	115 (4.53)	118 (4.65)	145 (5.71)	HS T260 ATEX

The life science business of Merck operates as MilliporeSigma in the U.S. and Canada.

MERCK

Specifications

Mixer Assembly Parts (included)			
Mixer, Rotor	**HS T10 ATEX**	**HS T60 ATEX**	**HS T260 ATEX**
	AX10-013	AX10-009	AX10-010
Weight kg (lb)	0.5 (1.1)	1.4 (3.09)	3.4 (7.50)

Material			
	Rotor Stainless steel in compliance with		**Female Bearing** Ceramic SiC
Material Code	316L	316L	SsiC
Technical Requirements - Rod	ASME® SA-479	EN10272	—
Technical Requirements - Plate	ASTM® A240	EN 10028-7/EN 10088-2	—

Additional Information	
Surface Roughness	External surface: Ra ≤ 0.38 µm (15 µin) . Inaccessible interior surfaces: Ra ≤ 0.8 µm (30µin).
Surface Treatment	Electropolished
Operating Temperature*	5 to 135 °C (41 to 275 °F)
Note	The assembled NovAseptic® Mixer may have different design temperature and/or pressure limits. The weakest component in the assembled product determines the maximum temperature and pressure limits.
Labeling	Each Rotor is individually labeled for full traceability according to our QA routines.
Packaging	The Rotor is packaged in a closed box.
Quality Control	Our Quality Assurance System guarantees the control and traceability at all stages of the manufacturing.
Liquid Viscosity	1 to 800 cP

The Rotor must be used with the appropriate Stator, Tank plate and ATEX HS drive unit.

Technical Assistance

For more information, please visit **SigmaAldrich.com**
for up-to-date worldwide contact information

© 2019 Merck KGaA, Darmstadt, Germany and/or its affiliates. All Rights Reserved. Merck, Millipore, NovAseptic and the vibrant M are trademarks of Merck KGaA, Darmstadt, Germany or its affiliates. All other trademarks are the property of their respective owners. Detailed information on trademarks is available via publicly accessible resources.

Lit. No. SP3355EN00 Ver. 3.0
10/2019